WINDOWS SCHEDULE

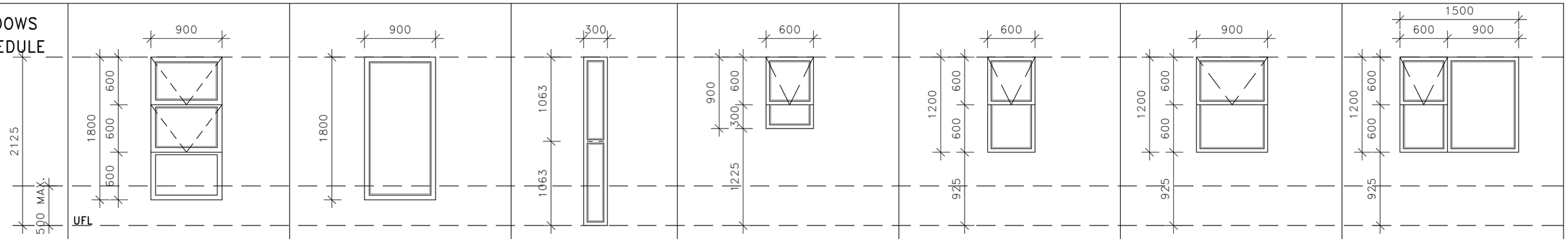

WINDOW NUMBER	PTT918	WIN 01	WIN 01	PT69	PT612	PT912	PTT1512
DESCRIPTION	ALUMINUM TOP HUNG	ALUMINUM FIXED PLANE	ALUMINUM FIXED PLANE	ALUMINUM TOP HUNG	ALUMINUM TOP HUNG	ALUMINUM TOP HUNG	ALUMINUM TOP HUNG
FRAME	CHARCOAL POWDER COATED ALUMINIUM FRAME	CHARCOAL POWDER COATED ALUMINIUM FRAME	CHARCOAL POWDER COATED ALUMINIUM FRAME	CHARCOAL POWDER COATED ALUMINIUM FRAME	CHARCOAL POWDER COATED ALUMINIUM FRAME	CHARCOAL POWDER COATED ALUMINIUM FRAME	CHARCOAL POWDER COATED ALUMINIUM FRAME
GLAZING	4MM SINGLE GLAZED LOW E WITH SAFETY GLASS AT LOWER PANELS	4MM SINGLE GLAZED LOW E WITH SAFETY GLASS AT LOWER PANELS	6MM SAFETY GLASS GLAZING	4MM SINGLE GLAZED SAND BLASTED	4MM SINGLE GLAZING	4MM SINGLE GLAZING	4MM SINGLE GLAZING
IRONMONGERY	AS PER MANUFACTURER	AS PER MANUFACTURER	AS PER MANUFACTURER	AS PER MANUFACTURER	AS PER MANUFACTURER	AS PER MANUFACTURER	AS PER MANUFACTURER
QUANTITY	03	09	04	02	01	01	03
WINDOW CILLS	EXTERNAL: PRE-CAST CONCRETE CILLS INTERIOR: PLASTERED CILL	EXTERNAL: PRE-CAST CONCRETE CILLS INTERIOR: PLASTERED CILL	EXTERNAL: PRE-CAST CONCRETE CILLS INTERIOR: PLASTERED CILL	EXTERNAL: PRE-CAST CONCRETE CILLS INTERIOR: PLASTERED CILL	EXTERNAL: PRE-CAST CONCRETE CILLS INTERIOR: PLASTERED CILL	EXTERNAL: PRE-CAST CONCRETE CILLS INTERIOR: PLASTERED CILL	EXTERNAL: PRE-CAST CONCRETE CILLS INTERIOR: PLASTERED CILL

WINDOWS SCHEDULE

SCALE 1 : 50

info@kwpcreate.com
www.kwpcreate.com
+27 (0) 12 343 9141

kwp CREATE

architects
urban designers
landscape architecte
project managers & mentors

No.	DATE	REVISION

Copyright vests in KWP. All Rights Reserved.

project description

REFURBISHMENT OF AN EXISTING LAPA
SANBI_
Pretoria National Botenical Gardens

drawing title
WINDOW SCHEDULE

drawing number
23.33/701

date
08/11/204

drawn
TN